Summary of safety and clinical performance(SSCP)

Motorized Circular Stapler for Single-use

Version：1.1

File No.：PET JSWD-PC-014

Compiled by：Wang Lian ying

Approved by：Vicky Lee

Date：2026.09.30

Summary of Safety and Clinical Performance

This Summary of Safety and Clinical Performance (SSCP) is intended to provide public access to an updated summary of the main aspects of the safety and clinical performance of the device.

The SSCP is not intended to replace the Instructions For Use as the main document to ensure the safe use of the device, nor is it intended to provide diagnostic or therapeutic suggestions to intended users or patients.

The following information is intended for users/healthcare professionals.

1. Device identification and general information

1.1Device name and trade name

Device name	Motorized Circular Stapler for Single-use
trade name	Motorized Circular Stapler for Single-use

1.2Device manufacturer

Company Name	B. J. ZH. F. Panther Medical Equipment Co., Ltd;
Company Address	No. 8 Shangcheng Road, Beiqijia, Changping District, 102209 Beijing P.R. China
SRN	CN-MF-000018084

1.3 Basic UDI-DI:

The manufacturer has applied basic UDI-DI for the product, which is as follows:

Product name	Model	Basis UDI-DI
Motorized Circular Stapler for Single-use	PCAA-21R,PCAA-24R,PCAA-26R,PCAA-29R, PCAA-32R,PCAA-34R	69392824MCSS10006X

1.4Medical device nomenclature description / text

The product consists of four assemblies: anvil assembly, bent instrument shaft assembly, handle assembly and auxiliary accessories. It is intended to be used for the creation of anastomoses and has application throughout the alimentary tract for end-to-end, end-to-side and side-to-side anastomoses. It is suitable for open general surgery. It features two rows of titanium staples arranged in a circular pattern at the distal end, with the staples staggered between the two rows. The distal stapling housing of the circular stapler is available in different diameters, including 21 mm, 24 mm, 26 mm, 29 mm, 32 mm, and 34 mm; hence the product is supplied in different specifications.

EMDN code:

H0202020101-SINGLE-USE CURVED CIRCULAR STAPLERS FOR OPEN SURGERY

1.5Class of device

Based on Article 2(1) of Regulation (EU) 2017/745 (MDR), the product is intended for the treatment of diseases and is therefore qualified as a medical device, as its principal intended action is not achieved by pharmacological, immunological or metabolic means.

According to Rule 8 and Rule 9 ANNEX VIII of MDR (2017/745):

Items need to be judge (Rule 8)	Result
All implantable devices and long-term surgically invasive devices are classified as class IIb unless they:	Yes
are intended to be placed in the teeth, in which case they are classified as class IIa;	Not Applicable
are intended to be used in direct contact with the heart, the central circulatory system or the central nervous system, in which case they are classified as class III;	Not Applicable
have a biological effect or are wholly or mainly absorbed, in which case they are classified as class III;	Not Applicable
are intended to undergo chemical change in the body in which case they are classified as class III, except if the devices are placed in the teeth;	Not Applicable
are intended to administer medicinal products, in which case they are classified as class III;	Not Applicable
are active implantable devices or their accessories, in which cases they are classified as class III;	Not Applicable
— are breast implants or surgical meshes, in which cases they are classified as class III;	Not Applicable
are total or partial joint replacements, in which case they are classified as class III, with the exception of ancillary components such as screws, wedges, plates and instruments;	Not Applicable
are spinal disc replacement implants or are implantable devices that come into contact with the spinal column, in which case they are classified as class III with the exception of components such as screws, wedges, plates and instruments.	Not Applicable
Items need to be judge (Rule 9)	Result
All active therapeutic devices intended to administer or exchange energy are classified as class IIa unless their characteristics are such that they may administer energy to or exchange energy with the human body in a potentially hazardous way, taking account	Yes

of the nature, the density and site of application of the energy, in which case they are classified as class IIb.	
All active devices intended to control or monitor the performance of active therapeutic class IIb devices, or intended directly to influence the performance of such devices are classified as class IIb.	Not Applicable
All active devices intended to emit ionizing radiation for therapeutic purposes, including devices which control or monitor such devices, or which directly influence their performance, are classified as class IIb.	Not Applicable
All active devices that are intended for controlling, monitoring or directly influencing the performance of active implantable devices are classified as class III.	Not Applicable

Under Rule 8 (Implantable Devices): The device system includes staples that are intended to be permanently implanted in the human body (retained for more than 30 days). It does not fall under any of the Class III exceptions listed in Rule 8 (e.g., it is not in direct contact with the central nervous system, not an active implantable device, and not a surgical mesh). Therefore, as an implantable device, it is classified as Class IIb.

Under Rule 9 (Active Therapeutic Devices): The powered stapler device is an active therapeutic device intended to administer mechanical energy to human tissue. Taking into account the nature, density, and site of application of the energy, it may administer energy in a potentially hazardous way. Therefore, it is classified as Class IIb.

Applying the principle that the highest applicable risk class shall be adopted, the final classification of the device system is Class IIb.

1.6. Year when the first certificate (CE) was issued covering the device

N/A

1.7. EU Authorized Representative

Company Name	Obelis s.a.
Company Address	Boulevard Général Wahis, 53 1030 Brussels, Belgium.
Country	Brussels
SRN	BE-AR-000000106

1.8 Notified Body of CE Certification

Notified Body	TÜV Rheinland LGA Products GmbH

Address	Tillystraße 2, 90431, Nürnberg, Germany
Country	Germany
Telephone Number	+86 10 8524 2033
Website	www.tuv.com
Notified Body's Single Identification Number	CE0197

2. Intended Use of the Device

2.1 Intended Purpose

The product consists of four assemblies: anvil assembly, bent instrument shaft assembly, handle assembly and auxiliary accessories. It is intended to be used for the creation of anastomoses and has application throughout the alimentary tract for end-to-end, end-to-side and side-to-side anastomoses. It is suitable for open general surgery.

2.2 Indication(s) and Target Population(s)

2.2.1 Indications

The product has application throughout the alimentary tract for end-to-end, end-to-side, and side-to side anastomoses.

2.2.2Target Populations

This product is suitable for adult patients over the age of 18.

2.3Contraindicationsand/or limitations:

1）This product shall not be used when the total thickness of compressed tissue is less than 1.0 mm or greater than 2.5 mm, or the tissue inner diameter is less than 21 mm. Use on tissue outside this thickness range will lead to unsatisfactory anastomosis, possibly causing anastomotic leakage, insufficient hemostasis or unsatisfactory therapeutic outcomes.

2）Do not use the device on ischemic or necrotic tissues.

3）Do not use for vascular anastomosis, inflamed areas, edematous mucosa, tumor sites, or resection margins with suspected residual cancerous tissue.

These devices are provided STERILE and are intended for use a SINGLE procedure only DISCARD AFTER USEDO NOTRESTERILIZE.

3.1Description of the device

3.1.1Principles of operation of the device and its mode of action

This stapler is supplied sterile and for single- use only. The stapler has a battery pack, which drives the transmission device through a motor to drive the staples that are pre- placed in two or several rows in parallel and misaligned in the component into the tissues that have been aligned and need to be stapled together. After passing through the tissue, the staples are blocked by the front anvil and bend inward, forming a "B" shape with misaligned arrangement, which staples the tissues together. Since small blood vessels can pass through the gaps in the "B" shape staples, it does not affect the blood supply at the stapling site and its distal end.

Functional Features

Synchronous cutting and anastomosis: The device is equipped with an internal circular knife and titanium staples. Under electric drive, it can first uniformly clamp the clamped digestive tract tissue (such as the esophageal stump and intestinal stump), and then simultaneously complete circular cutting (removing excess tissue) and circular anastomosis (titanium staples arranged in a circular shape, stapling and fixing the two ends of the tissue). This avoids the tissue displacement and anastomotic malposition problems that may occur during the "cutting-anastomosis step-by-step operation" of manual instruments, especially for end-to-end anastomosis of luminal tissues (such as the esophagus and intestine).

Multi-anastomosis mode adaptation: For different surgical scenarios (end-to-end,

end-to-side, side-to-side anastomosis), functional adaptation is achieved through instrument structural design (such as adjustable pin base angle, adaptation to different specifications of anastomosis components);

End-to-end anastomosis: It is suitable for the docking of digestive tract lumens with similar diameters (such as small intestinal stump anastomosis), ensuring lumen patency through circular anastomosis;

End-to-side anastomosis: It is suitable for docking with large differences in lumen diameter (such as the anastomosis of the esophagus and the shaped gastric tube). Through the anastomosis design of "broken end and side wall", it can avoid lumen stenosis;

Lateral-lateral anastomosis: It is suitable for cases requiring enlargement of the anastomotic stoma or complex pathway reconstruction (such as jejunal lateral-lateral anastomosis to prevent bile reflux). By clamping and cutting the tissues on both sides, a smooth lateral anastomotic stoma is formed.

Constant speed drive: The built-in micro motor provides stable driving force, enabling constant speed operation during the "cutting-anastomosis" process, avoiding problems caused by uneven manual operation strength of the doctor.

3.1.2 General description of key functional elements

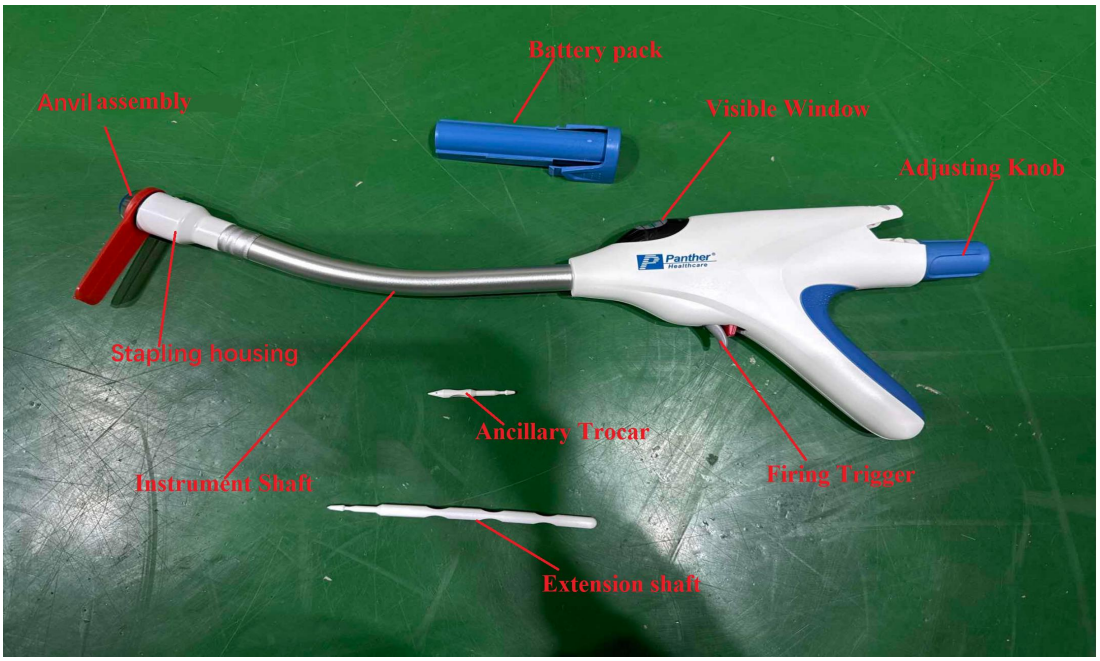

parts name	Component Function
Anvil assembly	Cooperates with the stapling housing to approximate tissue and drives staples to form B-shape for tissue suturing.
Stapling housing	Holds staples and cutter.
Instrument Shaft	Curved metal shaft connecting the handle and distal functional components.
Battery pack	Supplies power for electric firing of the instrument.
Visible Window	Observation window for reading tissue compression scale.
Adjusting Knob	Used to adjust the gap between the anvil assembly and stapling housing.
Firing Trigger	Activates the stapling and cutting procedure.
Ancillary Trocar	The Ancillary Trocar is attached to the anvil shaft to facilitate controlled tissue penetration by surgeons. It enables surgical

	procedures such as triple stapling technique and end-to-side anastomosis.The radiopaque design allows intraoperative visualization under X-ray. It is an optional accessory for selective use according to surgical requirements.
Extension shaft	An optional auxiliary accessory, which can be used together with the Ancillary Trocar. It extends the effective operating length of the instrument, facilitating the surgeon to perform tissue puncture and anvil introduction in deep surgical sites with limited operating space.

Internal structure diagram

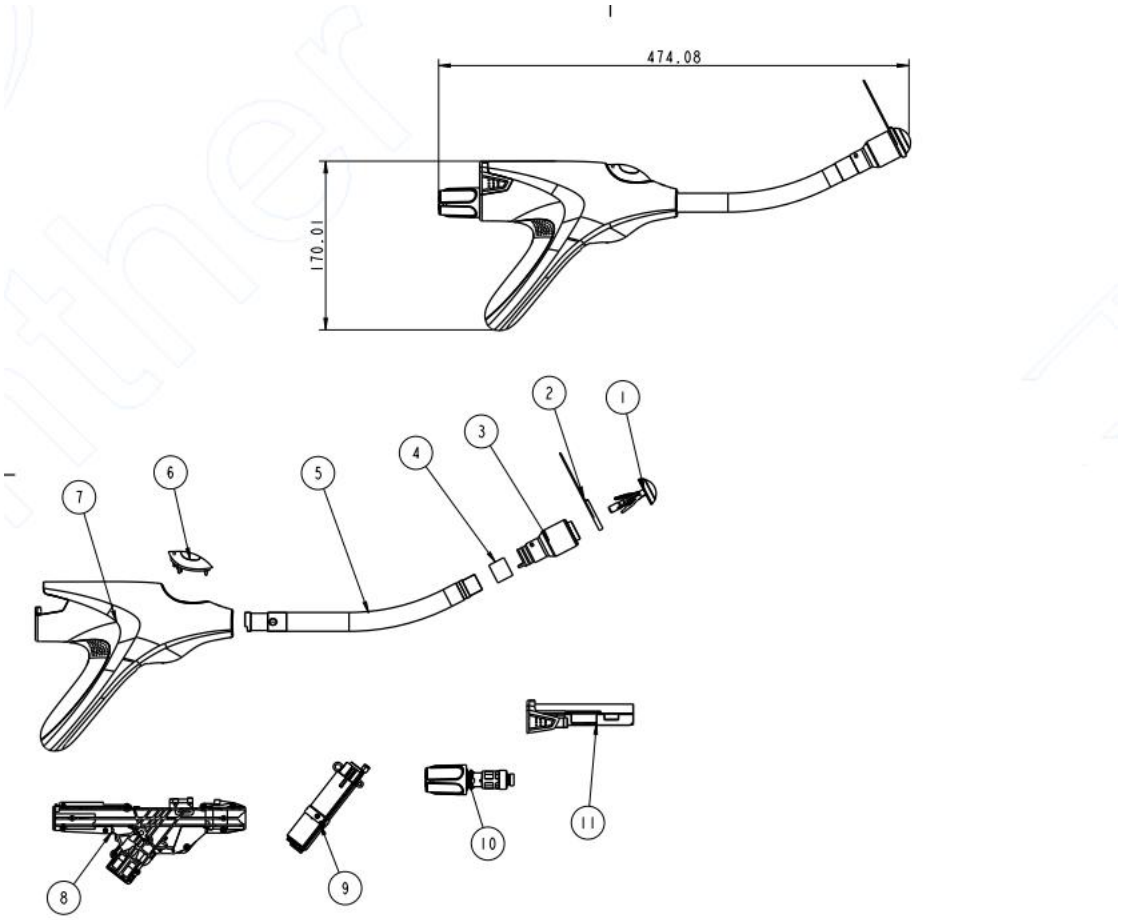

1	Anvil assembly
2	Red ring

3	Stapling housing
4	Front tightening ring
5	Instrument Shaft
6	Visible Window
7	Outer casing
7	Visible Window
8	Left and Right Brackets
9	Electric Motor
10	Adjusting Knob
11	Battery pack

3.1.3 Raw Materials

The product consists of four assemblies: anvil assembly, bent instrument shaft assembly, handle assembly and auxiliary accessories.

1. Anvil assembly (Items 12 – 17): Anvil Cap, Breakaway Washer, Locking Spring, Anvil Shaft
2. Bent instrument shaft assembly (Items 2 – 5, 18 – 19, 23): Device Trocar, Stapling housing, Front tightening ring, Instrument Shaft, Staple retaining cap, Cutter, Staple. The Cutter and Staple are installed inside the Stapling housing.
3. Handle assembly (Items 6 – 11): Outer casing, Visible Window, Battery Pack, Adjusting Knob, Firing Trigger, Red Safety
4. Auxiliary accessories (Items 21 – 22): Ancillary Trocar, Extension shaft

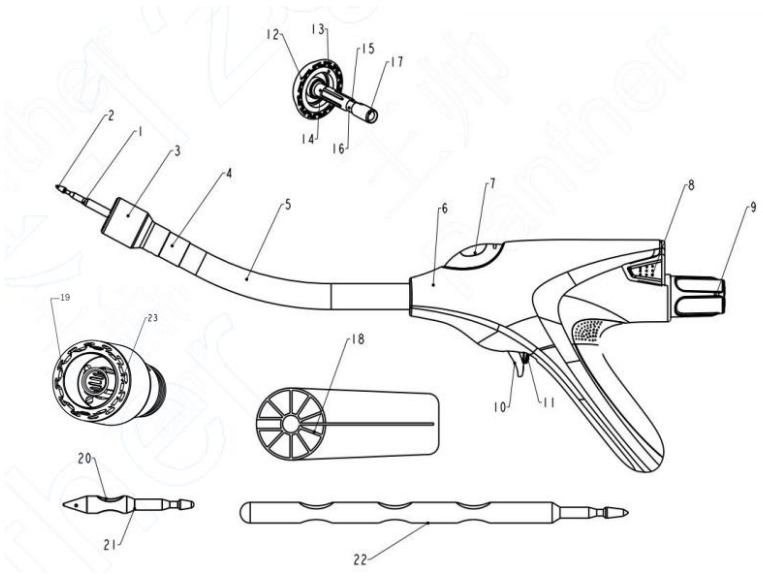

The Motorized Circular Stapler for Single-use intraoperative use. The long end contacting components have a single contact duration far less than 24 hours. In accordance with EN ISO 10993- 1:2025, the biological contact duration category is judged as limited exposure. The staples constitute permanently implanted parts with a total device exposure duration of more than 30 days, and the category is long- term exposure.

List of contact mode and time with patients

NO.	Part Name	Material	Contact Mode	Duration
1	Device Trocar	1.4301	internal tissue	A – limited (≤24 h)
2	Stapling housing	ABS		
3	Staple pusher	PC		
4	Front tightening ring	Aluminum Alloy 6061		
5	Instrument Shaft	Aluminum Alloy 6061		
6	Anvil Cap	1.4301,ABS		
7	Breakaway Washer	PE		
8	Locking Spring	1.4301		
9	Anvil Shaft	1.4301		
10	Cutter	1.4028		
11	Ancillary Trocar	PP		
12	Extension shaft	PP		
13	Staple	Grade 2		C – long-term (>30 d)

3.1.4 Method of sterilization

The product is sterilized by ethylene oxide, and be provided sterile, with validity for 5 years.

3.2 A reference to previous generation(s) or variants if such exist, and a description of the differences

The main structure composition, material range, mode of action, performance index, inspection method and intended use of the product are similar to our company's listed and certified Circular stapler. Only the

operation is changed from manual feeding force to electric feeding force. Moreover, the Circular stapler has obtained MDD(HD2185282-1) certification in 2010. No adverse events or customer complaints occurred.

3.3Description of any accessories which are intended to be used in combination with the device

-Accessories and device combinations

The accessories include the Ancillary Trocar and Extension shaft.





Schematic Diagram of Connection between Ancillary Trocar and Anvil Assembly

The connection between the anvil assembly and ancillary trocar enables improved penetration through tissue selected by the surgeon for anastomosis.

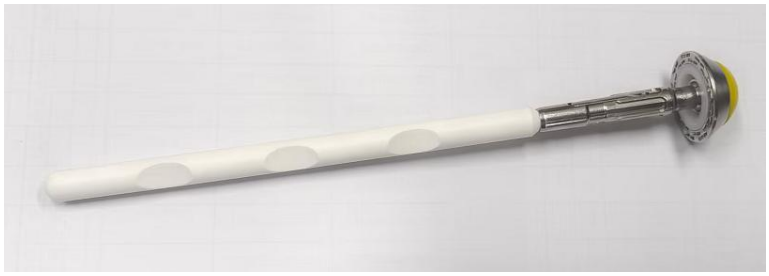

Schematic Diagram of Connection between Anvil Assembly and Extension Shaft

The connection between the anvil assembly and extension shaft allows easier manipulation of the anvil assembly during surgical purse-string suture placement.

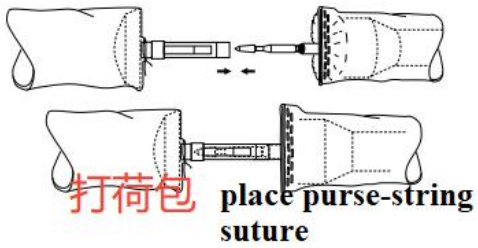

-Accessories / equipment required for use but not provided with the devices

This product is not suitable for minimally invasive surgery and cannot be used with trocars, hence there are no other mating accessories for the product.

3.4Description of any other devices and products which are intended to be used in combination with the device

NA

4. Risks and warnings

4.1. Residual risks and undesirable effects

Although this device has undergone rigorous design and testing, all surgical procedures and medical devices carry certain inherent risks. Based on the clinical evaluation, the main identified risks and potential side- effects are listed below:

Risk / Side- effect	Description	Control Measures
Anastomotic leakage	Poor healing of the anastomosis leading to leakage of gastrointestinal contents into the abdominal cavity, which may result in severe infection. It is one of the most serious complications following gastrointestinal anastomosis.	Select an appropriate device size in strict accordance with the Instructions for Use; verify anastomotic integrity intra- operatively; perform reinforcing suturing where necessary.
Anastomotic bleeding	Incomplete haemostasis at the anastomosis site resulting in post- operative haemorrhage.	Assess tissue condition pre- operatively; check haemostasis status intra- operatively.

Risk / Side- effect	Description	Control Measures
Anastomotic stricture	Scar tissue forms during anastomotic healing, narrowing the lumen and potentially impairing the passage of food.	Select an appropriate anastomosis diameter; conduct regular post- operative follow- up.
Device malfunction	In rare circumstances, the device may experience issues such as insufficient battery power, failure to fire, or inadequate staple formation.	Check the device expiry date and package integrity prior to use; immediately replace with a backup device if malfunction occurs during surgery.
Infection	A risk of infection is inherent to any surgical procedure.	The device is supplied sterile; strictly adhere to aseptic operating practices.

4.2. Warnings and precautions

4.2.1Warnings

1).If the green indicator light fails to illuminate or is significantly dim after power-on, it indicates insufficient battery power. Replace the entire device assembly.

2).If the white light illuminates after power-on, it means the battery compartment is reversely connected with positive and negative poles, rendering the device inoperable. Replace the entire device assembly.

3).If the indicator light is on but firing fails when the trigger is pulled, this indicates device malfunction or voltage lower than 5 V. Do not use the device under this circumstance and replace it immediately.

4).If the safety lock can be unlocked even when the red indicator pin is outside the viewing window, the device is faulty and shall be replaced.

5).If the white light does not turn on and firing cannot stop after completion of firing actuation, pull out the battery compartment immediately.

6).If the white light illuminates after firing, and secondary firing can still be triggered by squeezing the firing handle, the device is defective.

7).Surgical operation shall be performed promptly after battery insertion; prolonged standby storage is prohibited.

8).Unauthorized modification of the product may cause product functional failure.

9).Battery replacement by untrained personnel may result in overheating, fire or explosion hazards.

4.2.2 precautions

1) The use of this product shall follow the general operating principles of circular gastrointestinal staplers. Surgical procedures shall only be performed by personnel who have been adequately trained and are familiar with relevant surgical techniques. Prior to any surgical procedure, consult professional medical literature regarding operative techniques, complications and clinical risks. This manual only provides general operation guidance for this motorized stapler and shall not substitute professional surgical guidelines. Operating surgeons shall refer to authoritative medical literature intraoperatively.
2) This is a single- use device. The entire device shall be discarded immediately after operation and must not be reused.
3) Inspect core stapling components including the Anvil assembly, stapling housing, blade ring and ring cutter before operation to prevent component displacement, detachment or loss during handling and intraoperative assembly.
4) After completing anastomosis, inspect residual tissue at the cutting margin. A continuous complete circular cutting edge confirms qualified anastomosis. If tissue defect or anastomotic leakage is found, perform supplementary hand suturing at the defective site to guarantee anastomotic sealing quality.
5) Contraindicate use for patients with confirmed hypersensitivity to any device materials that come into contact with human tissue.
6) Handle the stapler gently; do not drop, impact or collide the device. Forbidden destructive operations include filing, grinding, scraping, scratching and striking the device with hard metal objects. Do not use damaged devices. Securely fix the device during transportation and avoid consigning together with sharp hard objects.
7) After clinical use, perform full decontamination on the device first and detach the battery compartment assembly before disposal. The device and separated battery pack must be submitted to designated professional WEEE electronic waste recycling collection points. Do not discard the device together with unsorted municipal household waste, and random dumping is prohibited to prevent environmental pollution and leakage of restricted hazardous substances.
8) Prevent liquid and foreign substances from penetrating the internal electronic structure of the device, including the battery compartment assembly and internal wiring.

9) Battery pack disposal shall comply with the requirements specified in the dedicated section *Disposal* of Battery Pack.

10) Select the appropriate specification of stapler according to the thickness and diameter of target digestive tract tissue before deployment.

11) Verify the safety and functional reliability of matched auxiliary accessories including the ancillary trocar and extension rod prior to operation.

12) Visually inspect the surface of the stapling housing preoperatively. If staples, blade ring or ring cutter protrude above the plane of the stapling housing, replace the whole device with a new sterile unit.

13) Before locking the Anvil assembly onto the guide shaft, confirm that target tissue is fully positioned between the Anvil assembly and stapling housing. Misplaced tissue will cause docking failure of the Anvil assembly, accidental separation during tissue tightening, and malformation of staples after firing.

14) Thoroughly check hemostasis status, anastomotic continuity and leakage risk after stapling. Pre-existing metal clips, sutures or foreign implants within the anastomotic area will compromise anastomotic integrity. Implement remedial measures such as supplementary suturing or electrocoagulation when necessary.

15) Unauthorized structural modification of the main device, stapling housing and staple assembly is strictly prohibited, which will directly lead to functional failure of the stapler.

16) This disposable motorized circular stapler is factory sealed and ethylene oxide sterilized, intended for single use on one patient only. Once the sterile packaging is opened, reuse, reprocessing, resterilization and repackaging are totally forbidden. Reprocessing disposable devices will damage structural stability of the stapling housing, Anvil assembly and cutting components, triggering device malfunction, patient trauma, severe infection, cross-contamination, infectious disease transmission and even life-threatening adverse outcomes.

17) Hospitals shall complete mandatory manufacturer-provided operational training before initial clinical use of the product. The manufacturer provides training PPT and physical device demonstration covering assembly of the battery compartment assembly, guide shaft, adjusting knob and full firing workflow.

4.3. Other relevant aspects of safety, including a summary of any field safety corrective action (FSCA including FSN) if applicable

No Field Safety Corrective Action (FSCA) / Field Safety Notice (FSN) has been implemented for this device. This device has not been placed on the EU market.

5. Summary of clinical evaluation and post- market clinical follow- up (PMCF)

The MDR conformity assessment of this device partially follows the substantial- equivalence approach, and this equivalence argument has been reviewed and endorsed by the Notified Body.

⚠ **Important note: Section 5.1 below presents clinical data for the equivalent device (ECHELON CIRCULAR™ Powered Stapler) only. Such data cannot be directly interpreted as clinical results of the subject device (Motorized Circular Stapler for Single- use), and are solely used to support the substantial- equivalence argument.**

No interventional human clinical investigations were performed on the subject device prior to CE- marking. The body of clinical evidence consists of non- clinical / pre- clinical tests performed by the manufacturer, the substantial- equivalence demonstration, peer- reviewed published literature, and publicly available post- market vigilance database data. After placing on the EU market, a dedicated PMCF plan will be implemented to collect real- world clinical data specific to the subject device for further verification of safety and performance.

5.1 Summary of clinical data related to equivalent device, if applicable

5.1.1 Identification of the equivalent device

Item	**Content**
Equivalent device trade name	ECHELON CIRCULAR™ Powered Stapler
Equivalent device models	CDH23P, CDH25P, CDH29P, CDH31P
Manufacturer	Ethicon Endo- Surgery (Johnson & Johnson MedTech)
Basic- UDI- DI of equivalent device	Not publicly available from open- source channels
CE status	MDR CE marked; placed on EU market in 2019
Availability of equivalent device SSCP in Eudamed	**The SSCP for this equivalent device is not publicly available in the Eudamed database.** In accordance with MDCG 2019- 9 Rev.1, a clinical summary for the equivalent device is provided below. Full details of individual studies can be found in Clinical Evaluation Report (CER) V2.2, Section 4.2.

5.1.2 Overview of clinical evidence sources for the equivalent device

Equivalent- device clinical evidence originates from multiple complementary sources:

1. Equivalent- device post- market PMCF real- world studies, including retrospective cohort and propensity- score- matched studies.
2. Peer- reviewed clinical publications indexed within PubMed, Embase and Cochrane Library.
3. Global public vigilance databases: FDA MAUDE, EU competent- authority alert and recall repositories.
4. Equivalent- device manufacturer risk- management documentation and annual Periodic Safety Update Reports (PSUR).

5.1.3 Combined summary of clinical studies for equivalent device

Multiple retrospective clinical studies of the ECHELON CIRCULAR™ Powered Stapler were included. The studies enrolled hundreds of adult patients receiving gastrointestinal anastomosis; the primary follow-up window was 30 days post-operatively.

- Clinical setting: adult colorectal and rectal, and oesophagogastric, tumour anastomotic reconstruction (open and laparoscopic approaches for the equivalent device).
- Clinical benefits: motor-driven firing reduces the required firing force and delivers standardised B-shaped staple formation, allowing gastrointestinal anastomotic reconstruction to be completed reliably. The anastomotic success rate was 96.4 % (159/165) in a propensity-score-matched cohort.
- Key safety outcomes (30 days post-operatively): anastomotic leakage 1.8 %; anastomotic bleeding 1.8 %; anastomotic stricture 5.7 % (median follow-up 12 months). Most adverse events were mild-to-moderate Clavien-Dindo Grade I – II complications.
- Study limitations: the included studies are predominantly retrospective and carry a potential for selection bias. Follow-up is limited to short-term outcomes. No 5- or 10-year long-term endpoint data are available.
- Device-related findings: most reported device performance issues were resolved without patient harm; the MAUDE search for 2012 – 2025 identified no recalls and no device-specific risk beyond the state-of-the-art benchmarks.

Full individual study metadata (title, DOI, inclusion and exclusion criteria, patient baseline and raw results) are stored in CER V2.2. Full study reports are not reproduced within this public SSCP.

5.1.4 Confirmation of long- term safety and performance for equivalent device

The equivalent device has been placed on the EU market since 2019. Its long- term safety and clinical performance are confirmed via a complete lifecycle evidence package; not relying on one single clinical trial.

1. PMCF activities implemented per MDR requirements continuously collect real-world clinical outcomes. Key endpoints (leakage, bleeding, stricture) are monitored. Periodic PMCF evaluation reports are generated to identify safety signals.
2. As Class IIb implant-component-containing active device, annual PSUR documents are prepared. PSUR aggregates PMS complaints, adverse events and literature updates to perform periodic benefit-risk re-assessment.
3. Selected real-world publications provide follow-up up to 6-12 months post-procedure for evaluation of late stricture and delayed anastomosis-related complications; outcomes align with SOTA benchmarks.
4. Continuous monitoring of FDA/MAUDE and EU competent-authority vigilance / recall databases with trend analysis. No device-specific long-term safety risks exceeding SOTA benchmarks were identified.
5. Risk-management documentation is iteratively updated using PMS / PMCF outputs; corresponding IFU warning and risk-control-measure updates are implemented.

Based on above evidence package, equivalent-device long-term safety and clinical performance are confirmed. Residual risks are acceptable when balanced against clinical benefits and are consistent with gastrointestinal-anastomosis-device current SOTA.

5.1.5 Summary of differences between subject device and equivalent device

Several differences exist between subject device and ECHELON CIRCULAR™ Powered Stapler: staple material, partial size-range specifications and accessory configuration.

Critical intended-use difference: Subject device is exclusively for open-surgery use and is forbidden for laparoscopic procedures. The equivalent device supports both open and laparoscopic applications.

All differences underwent three-dimensional (technical, biological, clinical) substantial-equivalence comparison documented in CER V2.2 Section 4.2. All identified differences are justified as clinically non-significant and will not alter clinical benefit-risk profile. Complete comparison tables are provided in CER V2.2.

⚠ Important statement: Equivalent-device clinical data only serves substantial-equivalence demonstration and cannot be regarded as subject-device own clinical results. Post-market, subject-device-specific real-world clinical data will be collected under dedicated PMCF plan for further safety-and-performance verification.

5.2 Summary of clinical data from conducted investigations of the device before the CE-marking, if applicable

No interventional human clinical investigations were performed on subject device prior to CE-marking. No MDR / MDD CIV-ID exists; no subject-device clinical investigation report is available on Eudamed.

All pre-CE-marking evidence is derived from non-clinical / pre-clinical testing, main test categories:

1. Bench verification and validation: B-shape staple formation, firing-force measurement, full-specification device reliability and performance testing.
2. Complete biological-safety evaluation following EN ISO 10993 series standards.
3. Electrical safety testing (EN 60601-1) and EMC electromagnetic-compatibility testing (EN 60601-1-2).
4. Summative usability testing (EN 62366-1) for use-related-risk assessment; risk-mitigation outputs are implemented into IFU warnings and user-training requirements.
5. Pre-clinical porcine gastrointestinal-anastomosis animal study: assessment of device operability, staple formation and short-term tissue-healing response.

   Animal-study data counts only as supplementary non-clinical evidence and cannot substitute human clinical evidence.

Full original test reports reside within manufacturer technical documentation and are described within CER V2.2. Human-clinical safety-and-performance conclusions are supported by substantial-equivalence argument, SOTA literature and public vigilance-database evidence.

5.3 Summary of clinical data from other sources

Besides equivalent-device clinical data and pre-CE-marking non-clinical studies, clinical evaluation uses following additional evidence sources.

5.3.1 Systematic state-of-the-art (SOTA) literature review

Systematic literature searches were performed on PubMed, Embase and Cochrane Library (cut-off date: 31 December 2025). Search scope: gastrointestinal anastomosis, manual / powered circular staplers. Initial retrieval:176 records. After deduplication and screening, 20 high-quality peer-reviewed publications containing pooled data for 18 159 patients were included. Included study types: randomised controlled trials, retrospective cohort studies, meta-analyses; covering hand-sewn anastomosis, manual circular staplers and multiple commercial powered circular staplers.

Literature supports: establishment of SOTA safety-and-performance benchmarks; comparison of benefit-risk profiles for alternative treatment modalities; differentiation between procedure-intrinsic complications and device-related risks.

Key SOTA acceptance benchmarks derived from included literature:

Endpoint Category	Endpoint	SOTA Acceptance Criterion
Clinical Performance	Anastomotic success rate	≥ 91.2%
Clinical Safety	Anastomotic leakage rate	≤8.5%
Clinical Safety	Anastomotic bleeding rate	≤3.9%
Clinical Safety	Anastomotic stricture rate	≤8%

Clinical Safety	Rate of Clavien Dindo several grades (Grade I, Grade II)	≤12.4%

5.3.2 Public post- market vigilance- database data

Searches were executed across public databases: FDA MAUDE, FDA Recall database, MHRA, BfArM, Swissmedic, NMPA. Search target: complaints, adverse- event and recall records for comparable / equivalent circular staplers.

Search conclusion: No device- specific major safety risks exceeding SOTA benchmarks were identified for comparable powered circular staplers. Most retrieved adverse events were linked to patient comorbidities, surgical technique and procedural factors rather than inherent device- design defects. Full search records are documented in CER V2.2.

5.3.3 Manufacturer- internal PMS complaint and vigilance data

Subject device has not been placed on EU market; no subject- device- specific internal complaint or vigilance data is available at present. After market placement, this dataset will be continuously collected for future SSCP, CER and PSUR updates.

5.3.4 Evidence for alternative treatment modalities

Benefit- risk summary for alternative therapeutic options (hand- sewn anastomosis, manual circular stapler, robotic- assisted anastomosis) is presented in Chapter 6 of this SSCP.

5.4 An overall summary of the clinical performance and safety

5.4.1 Overall clinical performance

The subject device is a single-use battery-powered circular stapler intended exclusively for open general surgery, for end-to-end, end-to-side and side-to-side gastrointestinal anastomosis in patients aged 18 years or older.

No pre-market interventional human clinical investigation was performed on the subject device. Performance conclusions are integrated from bench validation, pre-clinical animal testing, the demonstration of equivalence and the state-of-the-art literature benchmarks:

●Bench testing: motor-driven firing delivers a lower firing force than conventional manual circular staplers; staples form a complete B shape; anastomosis and cutting functions across the full specification range satisfy the design input requirements.

●Direct comparative testing against the equivalent device met all acceptance criteria for both devices (Section 5.2).

●The pre-clinical Bama pig anastomosis model confirmed that the device can complete gastrointestinal anastomosis, with staple formation and tissue apposition meeting the expected outcomes.

●On the basis of the equivalence argument combined with the state-of-the-art benchmarks, and under strict IFU-compliant use, the anastomotic success rate of the subject device is inferred to meet the state-of-the-art criterion (≥ 91.2 %) and to fulfil its intended purpose of gastrointestinal anastomotic reconstruction.

The equivalent-device clinical data, assessed against the five state-of-the-art endpoints, are summarised below.

Endpoint	Acceptance criterion	Equivalent-device result	Conclusion
Anastomotic success rate	≥ 91.2 %	96.4 % (159/165); corroborated by 94.1 % (64/68)	Criterion met
Anastomotic leakage rate	≤ 8.5 %	1.8 % (vs 6.9 % for manual staplers; 74 % reduction, p < 0.001)	Criterion met
Anastomotic bleeding rate	≤ 3.9 %	1.8 % (vs 9.2 % for manual staplers; 80 % reduction, p < 0.001)	Criterion met
Anastomotic stricture rate	≤ 8 %	5.7 % (2/35, median follow-up 12 months)	Criterion met
Clavien-Dindo Grade I–II complication rate	≤ 12.4 %	4.8 %	Criterion met

Clinical performance claim: standardised motor-driven operation reduces the firing force, minimises tissue manipulation and delivers consistent staple formation. This claim is supported by the bench and comparative test data and by the peer-reviewed clinical literature on the equivalent device.

The above performance outcomes are inferences derived from the currently available evidence. After market placement, subject-device-specific real-world clinical outcomes will be collected under the PMCF activities described in Section 5.5 for further verification.

5.4.2 Clinical safety and benefit- risk profile

Intended clinical benefits: when used in compliance with the IFU and with correct screening of indications and contraindications, the intended clinical benefits are:

- reliable creation of end-to-end, end-to-side and side-to-side gastrointestinal anastomoses in the open-surgery setting;
- motor-driven firing reduces the manual firing-force requirement, delivers standardised B-shaped staple formation and lowers inter-operator variability;
- an expected improvement in the anastomotic success rate and a reduction in the risk of anastomotic

bleeding and leakage;

- a reduction in mild-to-moderate post-operative complications, supporting the achievement of the surgical therapeutic goal; eligible patients may avoid a permanent stoma and gain a quality-of-life benefit;
- shorter operating time and hospital stay, earlier return to normal activity and fewer re-interventions.

Known undesirable effects and side effects (procedure-intrinsic risks): full descriptions are given in Section 4.1. The listed complications are mostly intrinsic risks of gastrointestinal anastomosis surgery; they also occur with manual staplers and hand-sewn techniques and are not automatically caused by device malfunction. Summary: anastomotic leakage or fistula (including thoracic fistula), anastomotic bleeding, anastomotic stricture (which may require endoscopic or surgical intervention), surgical-site infection, and Clavien-Dindo surgical complications (predominantly Grade I–II mild-to-moderate events; Grade IIIa and above occur at low frequency).

Residual-risk acceptability: full-lifecycle risk management was performed in accordance with EN ISO 14971:2019. All known and foreseeable hazards were identified and risk control measures implemented, comprising design controls, verification and validation, IFU warnings, contraindications and mandatory end-user training. After implementation of the risk controls, the residual risks are limited to the procedure-related adverse events listed in Section 4.1. Combined with the state-of-the-art benchmarks, the equivalent-device clinical data and the public vigilance database evidence, the residual risks are considered acceptable when balanced against the intended therapeutic benefits. No unacceptable device-specific high risk has been identified.

GSPR coverage: the MDR Annex I requirements that call for clinical evidence are covered by the evidence assembled in this chapter — GSPR 1 (general safety and performance), GSPR 2 (risk reduction and residual-risk acceptability), GSPR 5 (use-related risks) and GSPR 8 (risks, undesirable side effects and benefit-risk ratio). The remaining requirements are demonstrated by non-clinical testing (biocompatibility, electrical safety, sterilisation and EMC).

5.4.3 Overall clinical- evaluation conclusion

Synthesising the subject-device-specific non-clinical and pre-clinical data, the demonstration of equivalence, the equivalent-device clinical evidence, the systematic state-of-the-art literature review and the public vigilance database evidence, the following conclusion is reached.
When used strictly in accordance with the Instructions for Use for its intended open-surgery gastrointestinal anastomosis indications, the Motorized Circular Stapler for Single-use fulfils the General Safety and Performance Requirements of MDR Annex I. The overall benefit-risk profile is acceptable, the residual risks are tolerable against the intended clinical benefits and are aligned with the current medical state of the art, and the information supplied with the device is adequate.
Given the absence of pre-market interventional human clinical investigations on the subject device, this conclusion will undergo continuous post-market re-validation through subject-device-specific real-world clinical data collected under the PMCF activities described below.

5.5 Ongoing or planned post- market clinical follow- up (PMCF)

Reference documents: Annex 16 PMCF Plan V2.2; MDCG 2020-7; MDR Article 85. Current status: the subject device has not yet been placed on the EU market and no PMCF activity is ongoing. The activities described

below are planned for the period following CE marking and market placement.
In accordance with the PMCF determination recorded in CER V2.2, Section 5.2.3, a separate PMCF study is not considered necessary: the technology is well established and the long-term safety and performance of the equivalent device have been verified. A structured PMCF programme (excluding a PMCF study) will nevertheless be carried out under the PMCF plan, since, in accordance with MDCG 2020-6, PMCF cannot be waived even for well-established technology. Subject-device-specific real-world evidence will be collected to close evidence gaps, to verify the safety and performance of the subject device continuously and to confirm the acceptability of the residual risks.

5.5.1 Overall PMCF objectives

- Collect subject-device-specific real-world clinical outcome data and reduce dependence on equivalent-device clinical evidence.
- Re-verify the clinical performance endpoint (anastomotic success rate) under real-world conditions of use.
- Monitor the safety endpoints: anastomotic leakage, anastomotic bleeding, anastomotic stricture, surgical-site infection, Clavien-Dindo grading, device malfunction and use-error-related events.
- Identify unforeseen device-specific adverse events and new safety signals.
- Verify the adequacy of the IFU warnings, contraindications and precautions in real-world practice.
- Generate the dataset supporting the periodic PSUR, CER and SSCP updates, and assess the need for additional risk-control actions such as IFU revision or field safety corrective action.

5.5.2 Planned PMCF data- collection methods

- Prospective standardised surgeon questionnaires, distributed to surgeons who have used the device, collecting indications, tissue parameters, device handling, intra-operative device performance and short-term post-operative clinical outcomes.
- Continuous analysis of PMS complaint and vigilance data, with categorisation and trend analysis.
- Retrospective real-world data collection in collaboration with hospitals performing open gastrointestinal surgery.
- Ongoing literature surveillance of new peer-reviewed publications on equivalent and benchmark powered circular staplers, to update the state-of-the-art benchmarks.

Planned sample size: 2,000 real-world clinical use cases, captured through an electronic data capture (EDC) system and documented in Annex 16 PMCF Plan V2.2.

5.5.3 Pre- defined PMCF endpoints (aligned with SOTA benchmarks)

Endpoint Category	**Endpoint**	**SOTA Acceptance Criterion**
Clinical Performance	Anastomotic success rate	≥ 91.2%
Clinical Safety	Anastomotic leakage rate	≤8.5%

Clinical Safety	Anastomotic bleeding rate	≤3.9%
Clinical Safety	Anastomotic stricture rate	≤8%
Clinical Safety	Rate of Clavien Dindo several grades (Grade I, Grade II)	≤12.4%
Safety endpoint	Device- malfunction events and use- error- related adverse events	Record all events and perform risk assessment.

Note on anastomotic stricture: stricture is a late-onset complication, typically occurring 3 to 12 months after surgery, whereas the PMCF programme follows patients for 30 days post-operatively. The stricture rate is therefore not established as a quantitative endpoint of the 30-day PMCF programme; stricture-related events are captured qualitatively through routine PMS and vigilance channels, and any signal is assessed during the periodic PMCF evaluation and PSUR reviews. The state-of-the-art acceptance criterion for stricture is retained in Section 5.3.1 to support the pre-market and ongoing benefit-risk evaluation.
Contingency arrangements: if the aggregated real-world PMCF data indicate that clinical safety or performance results exceed the pre-defined acceptance thresholds, the manufacturer will initiate appropriate follow-up activities, including root-cause evaluation, re-assessment of the benefit-risk profile and review of the applicable state-of-the-art benchmarks. Where necessary, risk-mitigation actions will be implemented, such as IFU updates, additional non-clinical testing or further literature evaluation. The relevant technical documentation, including the risk management file, the CER and this SSCP, will be updated accordingly. Should the overall benefit-risk balance become unfavourable, the Notified Body will be notified without undue delay.

5.5.4 PMCF deliverables and update triggers

- PMCF evaluation report, prepared following MDCG 2020- 8 template;
- PMCF findings feed into annual PSUR;
- New safety- related findings from PMCF trigger CER and SSCP revision;
- PMCF outcomes are also used to re- assess adequacy of IFU warnings and contra- indications.

5.5.5 Limitations of PMCF

Planned PMCF is primarily observational real- world- data collection; it is not a controlled clinical trial. Inherent limitations include surgeon- selection bias and partial missing case data. Therefore PMCF dataset shall be assessed in combination with risk- management outputs, complaint / vigilance data and literature evidence. Conclusions shall not rely on PMCF data in isolation.

5.5.6 Interface between PMCF, PMS and PSUR

PMCF forms an integrated component of overall PMS system. All PMCF findings are fed into PSUR. In reverse, newly- identified risks from PMS vigilance and PSUR may trigger revision / adjustment of PMCF objectives, endpoints, sample- size and data- collection strategy.

6.Possible diagnostic or therapeutic alternatives

Different surgical treatment options are available for your condition requiring bowel resection and re- connection (anastomosis). These options include hand- sewn suturing, non- motorized stapler devices or

alternative surgical reconstruction techniques. In some situations for patients who cannot tolerate major surgery, non- surgical palliative treatments may be considered.

There is no simple “best option” suitable for every patient. The choice of treatment depends on your disease, anatomy, general physical condition and the opinion of your surgeon. **You are recommended to discuss these possible therapeutic alternatives thoroughly with your healthcare professional to decide which treatment fits your individual situation.**

This SSCP document does not provide individual medical advice for your case.

7. Suggested Profile and Training for Users

The intended users of this product are medical professionals, such as clinicians, nurses, etc.

8. Reference to Any Harmonised Standards and CS Applied

The standards/Common Specifications (CS) applicable for this product are listed as below

List of Applicable Standards

No.	Regulation/Standard Number	Regulation/Standard Name
1	MEDDEV 2.7/1 rev.4	Clinical evaluation: Guide for manufacturers and notified bodies
2	MDR 2017/745	Medical Device Regulation
3	EN 556-1:2024	Sterilization of medical devices. Requirements for medical devices to be designated "STERILE" - Requirements for terminally sterilized medical devices
4	EN ISO 5832-2:2025	Implants for surgery - Metallic materials - Part 2: Unalloyed titanium
5	EN ISO 10993-1:2025	Biological evaluation of medical devices — Part 1: Requirements and general principles for the evaluation of biological safety within a risk management process
6	EN ISO 10993-3:2014	Biological evaluation of medical devices - Part 3: Tests for genotoxicity, carcinogenicity and reproductive toxicity (ISO 10993-3:2014)
7	EN ISO 10993-4:2017	Biological evaluation of medical devices — Part 4: Selection of tests for interactions with blood（EN ISO 10993-4:2017）
8	EN ISO 10993-5:2009/A11:2025	Biological evaluation of medical devices — Part 5: Tests for in vitro cytotoxicity
9	EN ISO 10993-6:2016	Biological evaluation of medical devices - Part 6:Tests for local effects after implantation (ISO 10993-6:2016)
10	EN ISO 10993-7:2008/A1:2022	Biological evaluation of medical devices - Part 7: Ethylene oxide sterilization residuals (ISO 10993-7:2008/Amd 1:2019)
	EN ISO 10993-7:2008/ A1:2022	Biological evaluation of medical devices - Part 7: Ethylene oxide

		sterilization residuals - Technical Corrigendum 1 (ISO 10993-7:2008/Cor 1:2009)
11	EN ISO 10993-9:2021	Biological evaluation of medical devices — Part 9: Framework for identification and quantification of potential degradation products
12	EN ISO 10993-10:2023	Biological evaluation of medical devices — Part 10: Tests for skin sensitization
13	EN ISO 10993-11:2018	Biological evaluation of medical devices - Part 11: Tests for systemic toxicity (ISO 10993-11:2017)
14	EN ISO 10993-12:2021+A1:2025	Biological evaluation of medical devices - Part 12: Sample preparation and reference materials (ISO 10993-12:2021/Amd 1:2025)
15	EN ISO 10993-13:2010	Biological evaluation of medical devices — Part 13: Identification and quantification of degradation products from polymeric medical devices
16	EN ISO 10993-16:2017	Biological evaluation of medical devices — Part 16: Toxicokinetic study design for degradation products and leachables
17	EN ISO 10993-17:2023/A1:2025	Biological evaluation of medical devices — Part 17: Toxicological risk assessment of medical device constituents(ISO 10993-17:2023/Amd 1:2025)
18	EN ISO 10993-18:2020/ A1:2023	Biological evaluation of medical devices — Part 18: Chemical characterization of medical device materials within a risk management process（ISO 10993-18:2020/Amd 1：2022）
19	ISO/TS 10993-19:2020	Biological evaluation of medical devices — Part 19: Physico-chemical, morphological and topographical characterization of materials
20	ISO/TS 10993-20:2006	Biological evaluation of medical devices — Part 20: Principles and methods for immunotoxicology testing of medical devices
21	EN ISO 10993-23:2021/A1:2025	Biological evaluation of medical devices - Part 23: Tests for irritation (ISO 10993-23:2021Amd 1:2025)
22	EN ISO 11135:2014	Sterilization of health care products - Ethylene oxide -Requirements for the development, validation and routine control of a sterilization process for medical devices (ISO 11135:2014)
	EN ISO 11135:2014/A1:2019	Sterilization of health-care products - Ethylene oxide - Requirements for the development, validation and routine control of a sterilization process for medical devices - Amendment 1: Revision of Annex E, Single batch release (ISO 11135:2014/Amd 1:2018)
23	EN ISO 11138-1:2017	Sterilization of health care products — Biological indicators — Part 1: General requirements
24	EN ISO 11138-2:2017	Sterilization of health care products - Biological indicators - Part 2: Biological indicators for ethylene oxide sterilization processes (ISO 11138-2:2017)
25	EN ISO 11140-1:2014	Sterilization of health care products - Chemical indicators - Part 1: General requirements (ISO 11140-1:2014)
26	EN ISO 11607-1:2020 + A1:2023	Packaging for terminally sterilized medical devices — Part 1: Requirements for materials, sterile barrier systems and packaging

		systems（ISO 11607-1:2019/Amd 1:2023）
27	EN ISO 11607-2:2020 + A1:2023	Packaging for terminally sterilized medical devices - Part 2: Validation requirements for forming, sealing and assembly processes (ISO 11607-2:2019/Amd 1:2023)
28	EN ISO 11737-1:2018+A1:2021	Sterilization of health care products — Microbiological methods — Part 1: Determination of a population of microorganisms on products (ISO 11737-1:2018/Amd 1:2021)
29	EN ISO 11737-2:2020	Sterilization of medical devices - Microbiological methods - Part 2: Tests of sterility performed in the definition, validation and maintenance of a sterilization process (ISO 11737-2:2019)
30	EN ISO 13485:2016+A11:2021	Medical devices — Quality management systems — Requirements for regulatory purposes (ISO 13485:2016)
31	EN ISO 14630:2024	Non-active surgical implants — General requirements (ISO 14630:2024)
32	EN ISO 14644-1:2015	Cleanrooms and associated controlled environments—Part 1: Classification of air cleanliness by particle concentration
33	EN ISO 14644-2:2015	Cleanrooms and associated controlled environments—Part 2: Monitoring to provide evidence of cleanroom performance related to air cleanliness by particle concentration
34	EN ISO 14971:2019/A11:2021	Medical devices - Application of risk management to medical devices (ISO 14971:2019)
35	EN ISO 15223-1:2021 + A1:2025	Medical devices - Symbols to be used with information to be supplied by the manufacturer- Part 1: General requirements
36	EN ISO 20417:2021	Medical devices — Information to be supplied by the manufacturer
37	EN 60601-1:2006/A13:2024	Medical electrical equipment - Part 1: General requirements for basic safety and essential performance（IEC 60601-1:2005, incorporating A1:2012, A2:2020）
38	EN 60601-1-2:2015 EN 60601-1-2:2015/A1:2021	Medical electrical equipment - Part 1-2: General requirements for basic safety and essential performance -Collateral Standard: Electromagnetic disturbances -Requirements and tests
39	EN 60601-1-6:2010/A1:2015 EN 60601-1-6:2010/A2:2020	Medical electrical equipment - Part 1-6: General requirements for basic safety and essential performance - Collateral standard: Usability
40	EN 62366-1:2015 EN 62366-1:2015/A2:2020	Medical devices - Application of usability engineering to medical devices
41	MDCG 2020-5	Guidance on clinical evaluation – Equivalence
42	MDCG 2020-6	Guidance on sufficient clinical evidence for legacy devices
43	EN IEC 62507-1:2011	Identification systems enabling unambiguous information interchange — Requirements — Part 1: Principles and methods（IEC 62507-1:2010）
44	EN IEC 62506:2023	Medical devices — Methods for accelerated ageing
45	ASTM F1980-21	Standard Guide for Accelerated Aging of Sterile Barrier Systems and Medical Devices
46	ASTM D4169-23	Standard Practice for Performance Testing of Shipping Containers and

		Systems
47	EN ISO 7153-1:2016	Surgical instruments — Materials — Part 1: Metals
48	ASTMF 2052-21	Standard Test Method for Measurement of Magnetically Induced Displacement Force on Medical Devices in the Magnetic Resonance Environment
49	ASTMF 2213-25	Standard Test Method for Measurement of Magnetically Induced Torque on Medical Devices in the Magnetic Resonance Environment
50	ASTM F2119- 24	Standard Test Method for Evaluation of MR Image Artifacts from Passive Implants
51	ASTM F2503- 23	Standard Practice for Marking Medical Devices and Other Items for Safety in the Magnetic Resonance Environment
52	EN ISO 20417:2026	Medical devices — Information to be supplied by the manufacturer
53	ISO 6335-2:2026	Surgical instruments — Staplers — Part 2: General requirements
54	EN ISO 13402:2025	Surgical and dental hand instruments — Determination of resistance against autoclaving, corrosion and thermal exposure
55	EN ISO 6892-1:2019	Metallic materials — Tensile testing — Part 1: Method of test at room temperature
56	ISO 4288:1996	Geometrical Product Specifications (GPS) - Surface texture: Profile method - Rules and procedures for the assessment of surface texture
57	ASTMF1886M-25	Standard Test Method for Determining Integrity of Seals for Flexible Packaging by Visual Inspection
58	ASTM F88M-23	Standard Test Method for Seal Strength of Flexible Barrier Materials
59	ASTM F1929-23	Standard Test Method for Detecting Seal Leaks in Porous Medical Packaging by Dye Penetration
60	ASTM F1140M-13	Standard Test Methods for Internal Pressurization Failure Resistance of Unrestrained Packages
61	ASTM F2096-11	Standard Test Method for Detecting Gross Leaks in Packaging by Internal Pressurization (Bubble Test)
62	USP <71>	Sterility Tests
63	MDCG 2019-9	Summary of safety and clinical performance A guide for manufacturers and notified bodies
64	MDCG 2020-7	Guidance on PMCF plan template
65	MDCG 2020-8	Guidance on PMCF evaluation report template
66	MDCG 2022-21	GUIDANCE ON PERIODIC SAFETY UPDATE REPORT (PSUR) ACCORDING TO REGULATION (EU) 2017/745 (MDR)

9. Revision history

SSCP revision number	Date issued	Change description	Revision validated by the Notified Body
			☑ Yes

1.0	2026.09.01	First procedure	Validation Language: English ☐No (only applicable for class Ⅱa or some Ⅱb implantable devices (MDR. Article 52 (4) 2nd paragraph) for which the SSCP is not yet validated by the NB)
1.1	2026.09.30	Update the evaluation endpoints based on the clinical evaluation report	☑ Yes Validation Language: English ☐No